Global Network

Sumitomo Heavy Industries, Ltd.

Industrial Machinery Segment, Plastics Machinery Div.

- **TOKYO** Sumitomo Heavy Industries, Ltd. Industrial Machinery Segment, Plastics Machinery Div., Global Sales Dept.
  1-1, Osaki 2-chome, Shinagawa-ku, Tokyo, 141-6025, Japan
  Tel:+81-3-6737-2576 Fax:+81-3-6866 5176
- **CHIBA** Sumitomo Heavy Industries, Ltd. Chiba Works/Technology Center
  731-1, Naganumahara, Inage-ku, Chiba City, 263-0001, Japan
  Tel:+81-43-420-1471 Fax:+81-43-420-1591
- **U.S.A.** Sumitomo (SHI) Demag Plastics Machinery North America, Inc. Atlanta Office/Technology Center
  410 Horizon Dr., Suite 200, Suwanee, GA 30024, United States
  Tel:+1-770-447-5430 Fax:+1-678-990-1716
  Sumitomo (SHI) Demag Plastics Machinery North America, Inc. Cleveland Office
  17909 Cleveland Parkway, Cleveland, OH 44135, United States
  Tel:+1-440-876-8960 Fax:+1-440-876-4383
  Sumitomo (SHI) Demag Plastics Machinery North America, Inc. Chicago Office/Facility and Tech Center
  1177 Corporate Grove Dr. Buffalo Grove, IL 60089, United States
  Tel:+1-847-947-9569
  Sumitomo (SHI) Demag Plastics Machinery North America, Inc. Anaheim Office/Training and Demo Center
  1130 N. Armando St. Anaheim, CA 92806, United States
- **MEXICO** SHI Plastics Machinery de Mexico, S.A. DE. C.V. Monterrey Office
  Ignacio Sepulveda 124, Seccion 7, Edificio 1 Parque Industrial Kalos Encarnacion Colonia La Encarnacion,
  Apodaca, N.L. C.P. 66633, Mexico
  Tel:+52-81-8356-1714, -1720, -1726 Fax:+52-81-8356-1710
  SHI Plastics Machinery de Mexico, S.A. DE. C.V. Leon Office
  Plaza San Martin Blvd Aeropuerto N° 849, Local "E" 3102, Col. San Jose el Alto, León Guanajuato CP 7545, Mexico
  Tel:+52-477-179-1730
- **BRAZIL** Sumitomo (SHI) Demag do Brasil Comercio de Máquinas para Plásticos Ltda.
  Rodovia do Açucar (SP-075), km 26-Jd. Oliveira-Itu/SP-Cep: 13312-500, Brazil
  Tel:+55-11-4403-9286
- **GERMANY** Sumitomo (SHI) Demag Plastics Machinery GmbH (Schwaig)
  Altdorfer Str. 15 90571 Schwaig, Germany
  Tel:+49-911-5061-0 Fax:+49-911-5061-265
  Sumitomo (SHI) Demag Plastics Machinery GmbH (Roßleben-Wiehe)
  Donndorfer Str. 3 06571 Roßleben-Wiehe, Germany
  Tel:+49-34672-97-0 Fax:+49-34672-97-333
- **UNITED KINGDOM** Sumitomo (SHI) Demag Plastics Machinery (UK) Ltd.
  Accent House, Triangle Business Park, Wendover Road, Stoke Mandeville, Bucks HP22 5BL, United Kingdom
  Tel:+44-1296-739-500
- **FRANCE** Sumitomo (SHI) Demag Plastics Machinery (France) S.A.S.
  6, avenue Irène Joliot Curie, 77700 Bailly-Romainvilliers, France
  Tel:+33-1-60-33-20-10
- **SPAIN / PORTUGAL** Sumitomo (SHI) Demag Plastics Machinery España
  S.L. Plaza de América 4, 2º - 3ª, ES 46004 Valencia, Spain
  Tel:+34-96-111-63-11
- **POLAND** Sumitomo (SHI) Demag Plastics Machinery Polska Sp. z o.o.
  Ul. Jagiellonska 81 - 83, 42 200 Czestochowa, Poland
  Tel:+48-34-370-95-40
- **AUSTRIA** Sumitomo (SHI) Demag Plastics Machinery GmbH (Branch Austria)
  Rudolf-Buchinger-Str. 22a, 3430 Tulln an der Donau, Austria
  Tel:+43-664-2311357
- **HUNGARY** Sumitomo (SHI) Demag Plastics Machinery Hungária Kft
  H 2045 Törökbálint, FSD Park 2, Fsz. 2, Hungary
  Tel:+36-70-332-7869
- **ITALY** Sumitomo (SHI) Demag Plastics Machinery (Italia)
  Strada del Portone, 61, 10137 Torino, Italy
  Tel:+39-011-95-95-057 Fax:+39-011-95-95-185
- **RUSSIA** JSC Sumitomo (SHI) Demag Plastics Machinery
  Kantemirovskaya Str. 65, room number 1, 115477 Moscow, Russia
  Tel:+7-495-937-97-64
- **CZECH / SLOVAKIA** Sumitomo (SHI) Demag Plastics Machinery Česko spol. s.r.o.
  K Bílému Vrchu 2912/3 193 00 Praha 9, Czech
  Tel:+420-296-226-210
- **IRELAND** Sumitomo (SHI) Demag Plastics Machinery Ltd.
  Unit C7, Grange Upper, Annacotty Business Park, Co. Limerick, V94 T328, Ireland
  Tel:+353-86-8254731
- **SHANGHAI** SHI Plastics Machinery (Shanghai) Ltd.
  11F SMEG Plaza, No.1386 Hong Qiao Road, Chang Ning District, Shanghai, 200336, China
  Tel:+86-21-3462-7556 Fax:+86-21-3462-7655
- **DALIAN** SHI Plastics Machinery (Shanghai) Ltd. Dalian Office
  1109 Fuyou Buiding, No.9 Huanghaixiliu Road, Economic and Technological Development Zone, Dalian 116600, China
  Tel:+86-411-8764-8052 Fax:+86-411-8764-8053
- **TIANJIN** SHI Plastics Machinery (Shanghai) Ltd. Tianjin Office
  Building3-2-402/Building3-1-401, U Gu Industrial Park, Shuanggang Town Industrial Park, Jinnan District, Tianjin 300350, China
  Tel:+86-22-5871-5537 Fax:+86-22-5871-5531
- **SUZHOU** SHI Plastics Machinery (Shanghai) Ltd. Suzhou Office / Technical Center
  Room 2101, Building 2, Jinfeng Urban Design Park, No 211, Zhujiang South Road, Mudu Town, Suzhou City, Jiangsu Prov. 215101, China
  Tel:+86-512-6632-1760 Fax:+86-512-6632-1770
- **NINGBO** Ningbo Sumiju Machinery, Ltd.
  No.775 Hengshan West Road, Beilun District, Ningbo City, Zhejiang 315800, China
  Tel:+86-574-2689-0162
  Demag Plastics Machinery (Ningbo) Co., Ltd.
  No.28, Baiyunshan Road, Beilun District, Ningbo City, Zhejiang 315800, China
  Tel:+86-574-2690-6600 Fax:+86-574-2690-6618
- **DONGGUAN** Dongguan SHI Plastics Machinery Ltd. / Technical Center
  8102 Block 8 Zhongda 365 No.9, Xincheng Road, Songshan Lake, Dongguan City, Guangdong Province 523808, China
  Tel:+86-769-8533-6071 Fax:+86-769-8554-9091
- **HONG KONG** SHI Plastics Machinery (Hong Kong) Ltd.
  Room 601, Telford House, 12-16 Wang Hoi Road, Kowloon Bay, Hong Kong
  Tel:+852-2750-6630 Fax:+852-2759-0008
- **TAIWAN** SHI Plastics Machinery (Taiwan) Inc.
  6F., No.35, Dexing W. Rd., Shilin Dist., Taipei 111, Taiwan
  Tel:+886-2-2831-4500 Fax:+886-2-2831-4483
  SHI Plastics Machinery (Taiwan) Inc. Taichung Office
  Rm D, 6F, No.190, Chung Kong 2nd Rd., Shi Tun Dist., Taichung 407, Taiwan
  Tel:+886-4-2358-7334 Fax:+886-4-2358-9335
- **KOREA** SHI Plastics Machinery (Korea) Co., Ltd.
  #203, JEIPLATZ, 186, Gasan digital 1-ro, Geumcheon-gu, Seoul 08502, Korea
  Tel:+82-2-757-8656 Fax:+82-2-757-8659
  SHI Plastics Machinery (Korea) Co., Ltd. Southern Office
  #209, 48, Dongbu-ro 22-gil, Dong-gu, Daegu 41242, Korea
- **SINGAPORE** SHI Plastics Machinery (S) Pte., Ltd. / Technology Center
  3791 Jalan Bukit Merah #03 07/08/09, E Centre @ Redhill, Singapore 159471
  Tel:+65-6779-7544 Fax:+65-6777-9211
- **THAILAND** SHI Plastics Machinery (Thailand) Ltd. / Technology Center
  317 Debaratna Road, Kwaeng Bangna Nuea, Khet Bangna, Bangkok 10260, Thailand
  Tel:+66-2-747-4053, -4054, -4055, -4056 Fax:+66-2-747-4081
  SHI Plastics Machinery (Thailand) Ltd. South Office
  Pinthong 2 Industrial Estate, Room BC-08, 150/55 Moo 9, Nongkham Subdistrict, Sriracha District, Chonburi 20230, Thailand
- **MALAYSIA** SHI Plastics Machinery (Malaysia) SDN BHD
  Unit G-01, Tingkat Bawah Menara Axis, No.2 Jalan 51A/223, 46100 Petaling Jaya, Selangor D.E. Malaysia
  Tel:+60-3-7958-2079, -2081 Fax:+60-3-7958-2084
  SHI Plastics Machinery (Malaysia) SDN BHD Penang Office
  No.7, Ground Floor, Jalan Kelisa Emas, Taman Kelisa Emas, 13700 Seberang Jaya, Penang, Malaysia
  Tel:+60-4-604-397-5725 Fax:+60-4-604-397-5726
- **VIETNAM** SHI Plastics Machinery (Vietnam) LLC
  Floor 1A, Hong Kong Tower, No.243A La Thanh Street, Lang Thuong Ward, Dong Da District, Hanoi, Vietnam
  Tel:+84-24-3728-0105 Fax:+84-24-3728-0106
  SHI Plastics Machinery (Vietnam) LLC Ho Chi Minh Branch
  1st floor, Block C, Dat Phuong Nam Building, 241A Chu Van An Street, Ward 12, Binh Thanh District, Ho Chi Minh City, Vietnam
  Tel:+84-8-3514-6645 Fax:+84-8-3514-6653
- **INDONESIA** PT. SHI Plastics Machinery (Indonesia)
  Jl. Tebet Raya No. 58, Tebet, Jakarta 12810, Indonesia
  Tel:+62-21-829-3872, -3873 Fax:+62-21-828-1645
- **PHILIPPINES** SHI Plastics Machinery (Phils) Inc.
  Ground Floor, Mirax Building 2270 Chino Roces Avenue, Makati City, Philippines
  Tel:+63-2-8845-0877, -8844-0632 Fax:+63-2-8886-4670
- **INDIA** SHI Plastics Machinery (India) Private Ltd.
  Unit No.22-25, 1st Floor, JMD Galleria, Sohna Road, Gurgaon, Haryana-122001, India
  Tel:+91-124-2217056, -64 Fax: +91-124-2218076
  SHI Plastics Machinery (India) Private Ltd. Chennai Office
  Second Floor, 308-309, Block No.64, Ten Square Building, Jawaharlal Nehru Road, Koyambedu, Chennai, Tamil Nadu 600107, India
  Tel:+91-124-2217056, -64

● Photographs of machines and details may differ from actual products. ● Specifications subject to change without notice for performance improvement.

©2019 - 2023 Sumitomo Heavy Industries, Ltd. All rights reserved.

B033EN01-2309HG

SE-EV-S-LGP

All-electric Injection Molding Machine for LGP

The machines in this series have acquired JIS B 6711:2021 (equivalent to ISO 20430:2020) certification.

We support the enhancement of our customers' corporate value through providing high performance, high quality, and safe injection molding machines.

www.shi.co.jp/plastics/

Sumitomo SHI DEMAG

SE-EV-S-LGP

All-electric Injection Molding Machine for LGP

Lineup

SE180EV-S-LGP (1800kN)

SE315EV-S-LGP (3150kN)

Sumitomo Heavy Industries, Ltd.

Ultra high speed and high response filling that opens up the possibilities of molding

A new area of thin-wall molding

Enabling ultra thin-walled products

With the increasing performance in smaller and lighter mobile, VR/AR, medical, automotive and other devices has fueled the need for thinner plastic parts. The SE-EV-S-LGP is a special series newly developed based on our flagship SE-EV-S and SE-EV-S-HD series, which allows to support this trend towards thinner and ultra-thin wall molding.

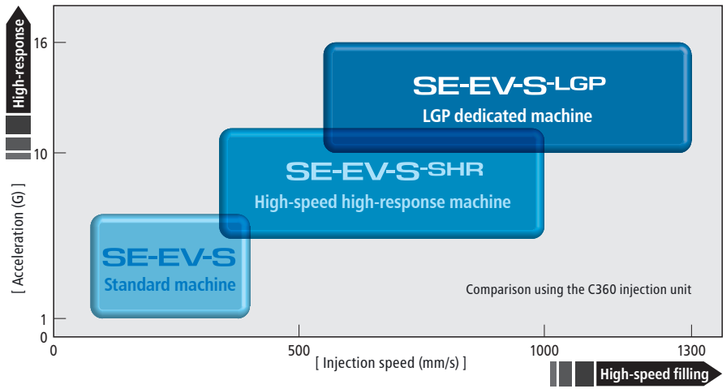

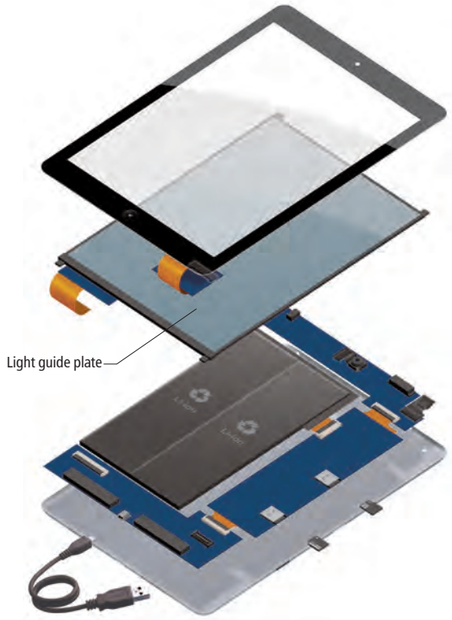

Compatible with high-viscosity resins

Two models to meet the needs

The SE-EV-S-LGP series equipped with ultra high speed/high response injection unit and high response compression unit, features two models of 1,800 kN class machine that supports ultra-thin molding and a more powerful 3,150 kN class machine with increased clamp force to allow thin-molding using high viscosity resins.

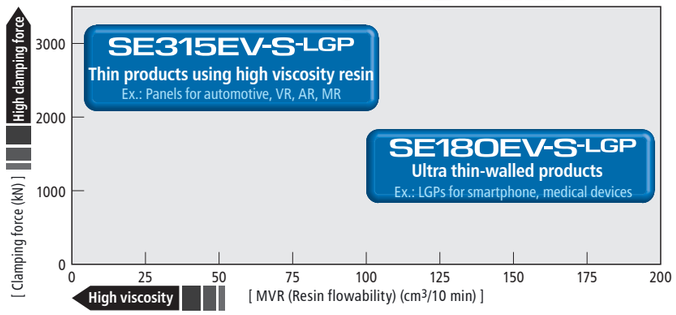

Solutions for difficult molding

Outstanding speed, responsiveness and injection pressure

A newly developed injection unit and screw assembly enable filling with unprecedented speed and responsivity, and high injection pressures. Precision and stability can be achieved even when molding ultra thin products and thin-walled products using high viscosity resins.

- Comparison of maximum injection speed -

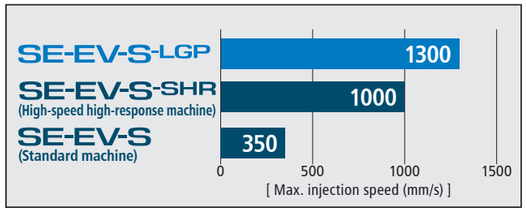

Comparison using the C360 injection unit

- Comparison of maximum injection pressure -

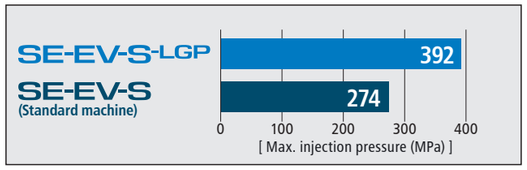

Comparison using the ø25 mm screw and the C360 injection unit

- Comparison of injection acceleration -

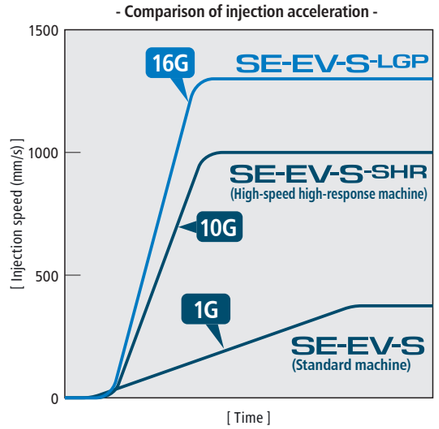

Ready to handle large products and high viscosity resins

High-response compression unit

Mold clamping force and pressure rise/release speed during cavity filling, pressure holding, and mold cooling are controlled by multistage according to the thickness and shape of products and the type of resin used. Large products are evenly filled as well, which reduces residual stress and birefringence, prevents warping and deformation, and improves releasability.

Optional for SE315EV-S-LGP

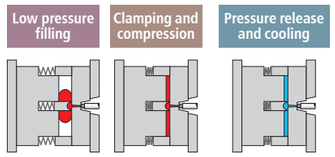

- Example of compression pattern -

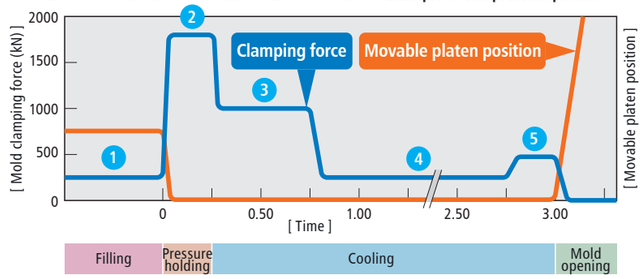

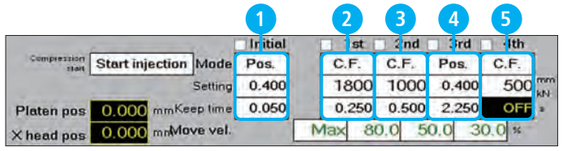

- Comparison of mold clamping acceleration -

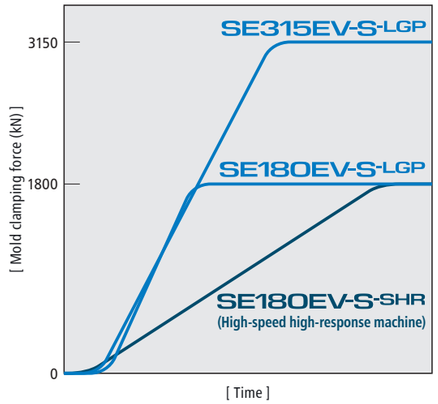

Yellowing prevention solution 1

Screw assembly for LGP

By adopting the screw with a small internal volume, residence time is reduced so that yellowing of transparent resin due to retention is suppressed.
Moreover, the optical surface treatment is applied to the inside of cylinder, which improves resin releasability and prevents decomposition caused by reactions with steel.

- Comparison of recovery shots (From yellowing to good products) -

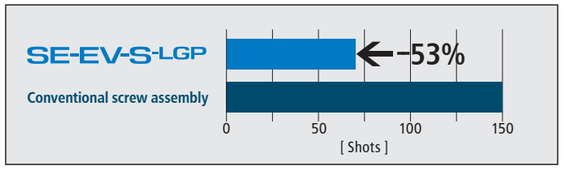

Because the resin can be easily replaced, less resin used in purging.

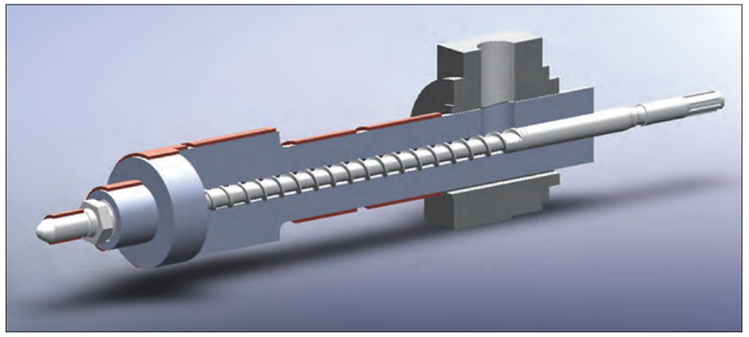

Yellowing prevention solution 2

Melt retention prevention purging

This machine is equipped with a purging feature that prevents burning and yellowing during temperature rise and fall.
Purge conditions during temperature changes can be set to prevent resin from remaining in the screw assembly at any point of production from the setup and first shot to finish.

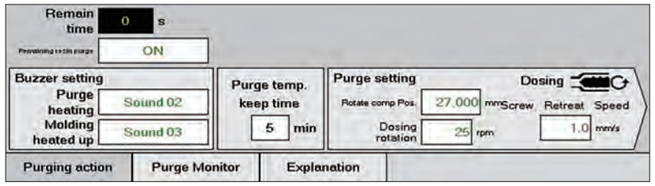

- Melt retention prevention purging -

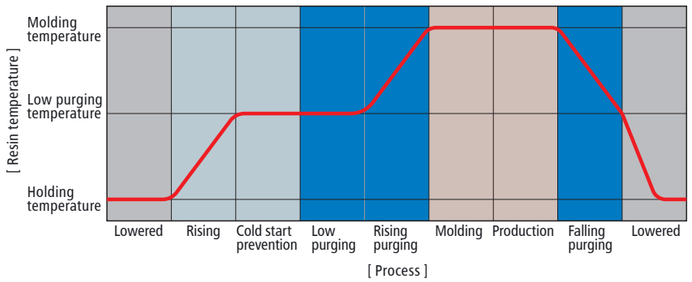

Optimizing nozzle temperature distribution

High-flow nozzle

Temperature distribution inside the nozzle is optimized to lower the viscosity of melt, which effectively improves cavity filling, prevents flashes and stringiness, and reduces residual stress. This special nozzle is ideal for thin optical parts.

- Comparison of nozzle internal temperature distribution -

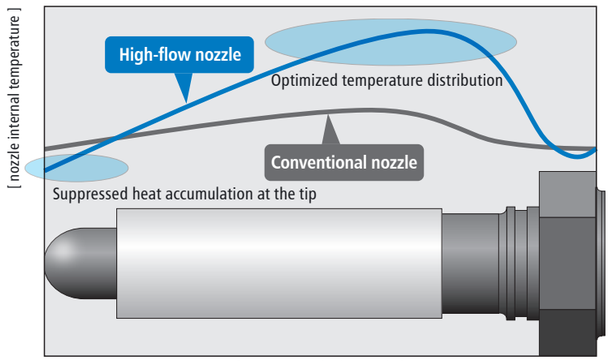

[Position inside the nozzle]

Main Specifications

Item	Unit	SE180EV-S-LGP	SE315EV-S-LGP
Clamping unit			
Clamping system		Double toggle (5 points)	Double toggle (5 points)
Clamping force (max.)	kN	1800	3150
Clearance between tie-bars (H x V)	mm	560 x 560	730 x 730
Platen size (H x V)	mm	800 x 795	1020 x 1020
Daylight	mm	815	1325
Mold opening stroke	mm	315	675
Platen speed max.	mm/s	1200	1394
Mold height (min. - max.)	mm	200 - 500	300 - 650
Locating hole diameter	mm	ϕ60	ϕ100
Ejector system (ejecting points)		Motor driven type (5 points)	Motor driven type (13 points)
Ejector ejection force	kN	45	60
Ejector speed (max.)	mm/s	333	267
Ejector stroke	mm	90	220

Injection unit

		C360		C360	
		M		M	
Screw diameter	mm	25	28	25	28
Screw type		Super high pressure		Super high pressure	
Injection pressure (max.) *1,*2	MPa	392	343	392	343
Holding pressure (max.) *1,*2	MPa	301	240	301	240
Theoretical injection capacity	cm^3	49	61	49	61
Injection weight (GPPS)	g	47	59	47	59
Plasticizing rate *3	kg/h	18	26	18	26
Injection rate	cm^3/s	638	800	638	800
Screw stroke	mm	100		100	
Injection speed (max.)	mm/s	1300		1300	
Screw speed (max.)	min^{-1}	400		400	
Number of temperature control zone		5		5	
Heater capacity	kW	6.4	7.2	6.4	7.2
Nozzle contact force	kN	43		43	

Machine dimensions and weight

Machine dimensions (L x W x H) *4	mm	5658 x 1396 x 1831	7336 x 1972 x 2102
Machine weight	t	7.1	13.0

*1 The max. injection pressure and max. hold pressure are calculated values and represent machine output, not resin pressure.
*2 The max. injection pressure and max. hold pressure are not sustained pressure levels.
*3 The plasticizing rate is given for a machine mounted with the SD Screw.
*4 The total length of the machine is to the front end of the injection unit when mounting the screw of the smallest diameter.
The total height of the machine does not include the dimensions of leveling pads and hopper.

- Specifications are subject to change without notice for performance improvement.
- Standard specification models of the SE-EV-S-LPG series comply with the safety standards of Japan, China and the nations of Southeast Asia.
They can also be modified to comply with the safety standards of Korea (KCs Mark), USA, Brazil, the nations of Oceania and Canada. For more information, contact us.

SE180EV-S-LGP Dimensions and Foundation Plan

●The dimensions of each part are for Japan.

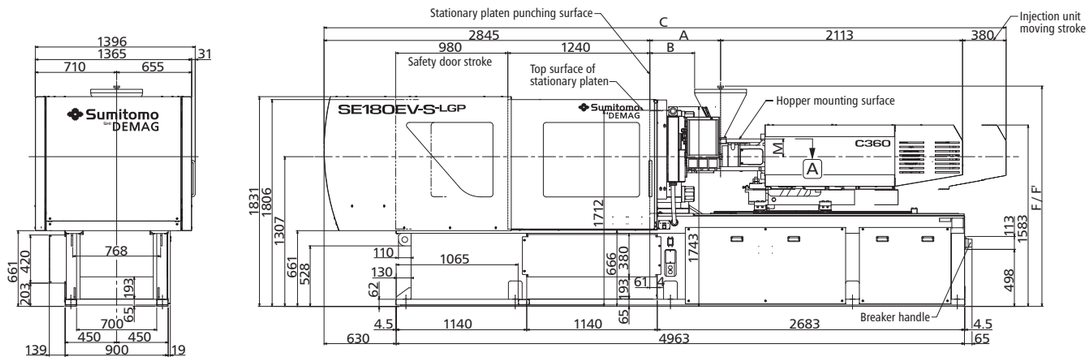

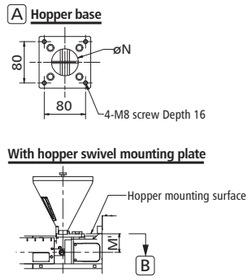

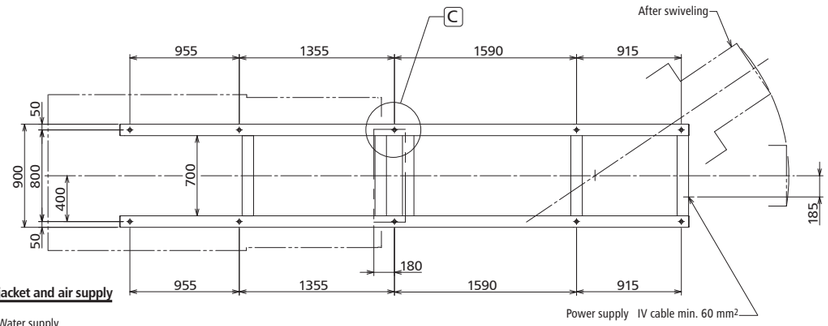

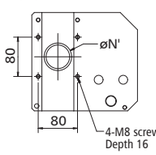

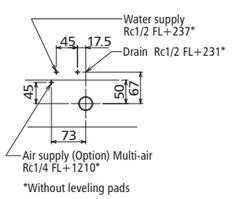

Injection unit	Screw type and dia.	A	B	C	F	(F')	L	M	(M')	N	(N')	Total length
C360	Super high pressure ø25	618	391	5956	1923	1933	522	155	165	52	55	6468
	Super high pressure ø28	679	452	6017			552					

The figure marked with a prime (') shows dimension equipped with the swivel mounting plate.

SE180EV-S-LGP Dimensions of Platens

●This drawing complies with JIS B 6701.

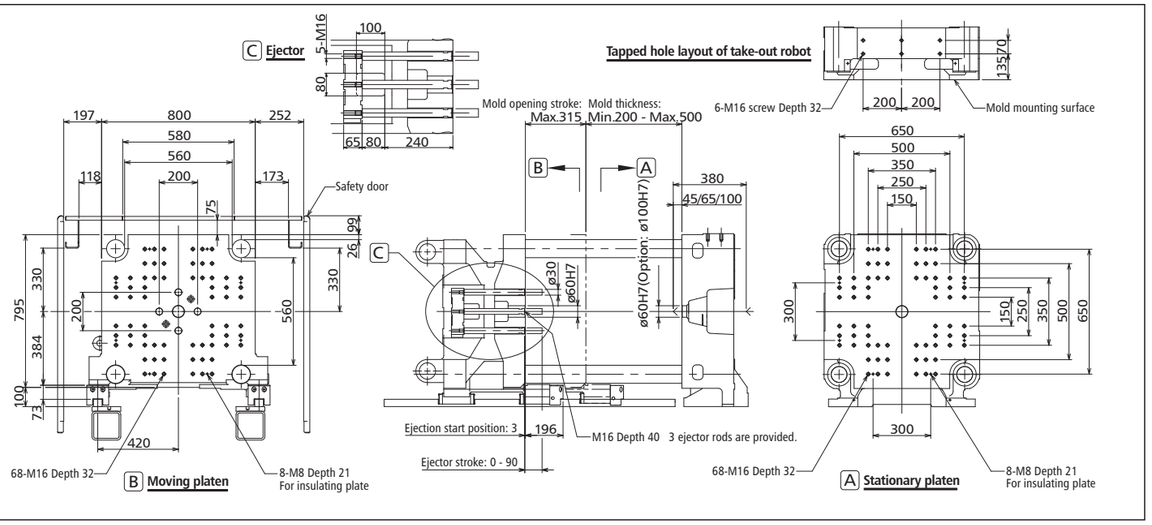

SE315EV-S-LGP Dimensions and Foundation Plan

●The dimensions of each part are for Japan.

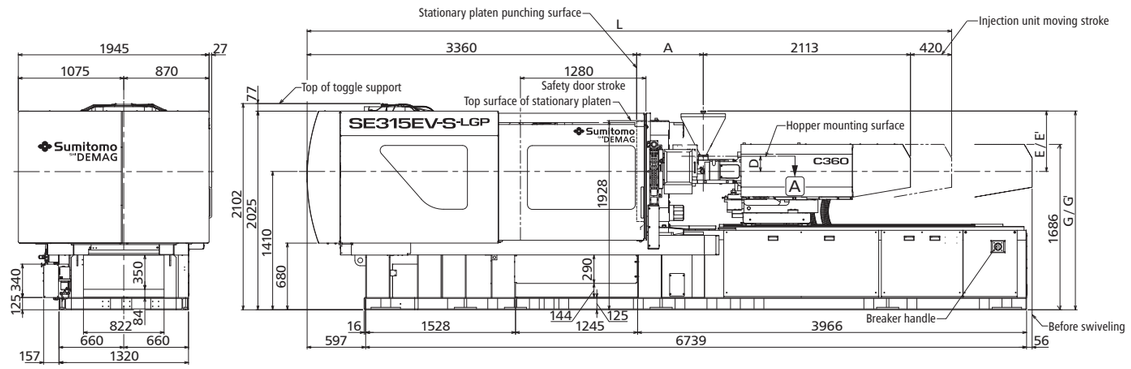

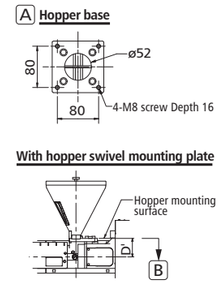

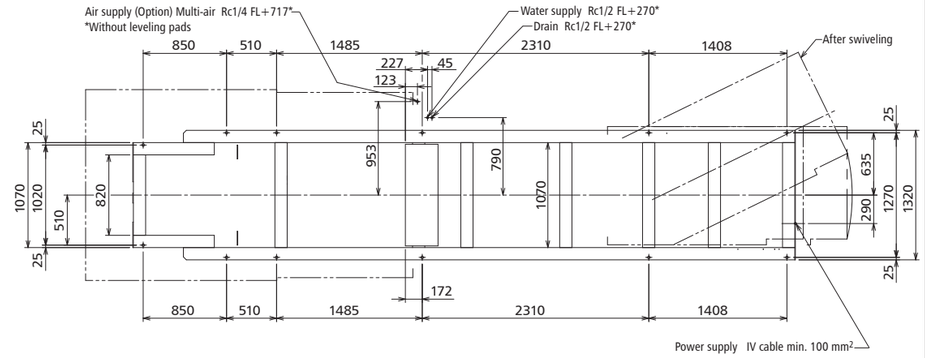

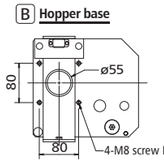

Injection unit	Screw type and dia.	A	D	(D')	E	(E')	G	(G')	L	Total length
C360	Super high pressure ø25	618	155	165	616	626	2026	2036	6511	7412
	Super high pressure ø28	679							6572	

The figure marked with a prime (') shows dimension equipped with the hopper swivel mounting plate.

SE315EV-S-LGP Dimensions of Platens
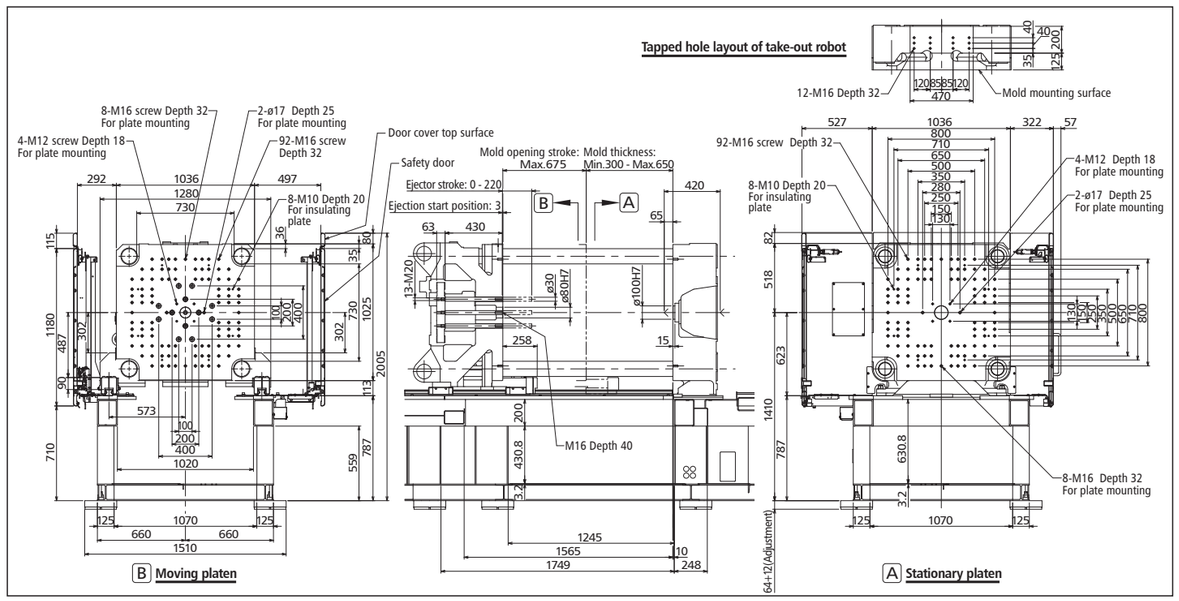
●This drawing complies with JIS B 6701.